Project X and its role in ADS

Mark Champion, Fermilab

Workshop on Accelerator-Driven Sub-Critical Systems and Thorium Utilization

September 28, 2010

What is Project X ?

Project X

Project X Goals

- Construct a 3 GeV continuous-wave superconducting H- linac, capable of delivering 1 mA of average beam current.
  - Supports rare processes and nuclear physics programs
  - Can support ADS development with beams energy <2 GeV
- Construct a 3-8 GeV pulsed linac, utilizing an ILC-style RF system, with total beam power delivered to 8 GeV ovf 300 kW.
  - Required for the neutrino program
  - Establishes a path toward a muon based facility
- Upgrade the Recycler and Main Injector to provide ≥ 2 MW to a neutrino production target at 60-120 GeV.
  - Supports the long baseline neutrino program
- Simultaneous operations of the rare processes and neutrino programs

Slide courtesy of Steve Holmes

Initial Configuration-2 aka "Reference Design"

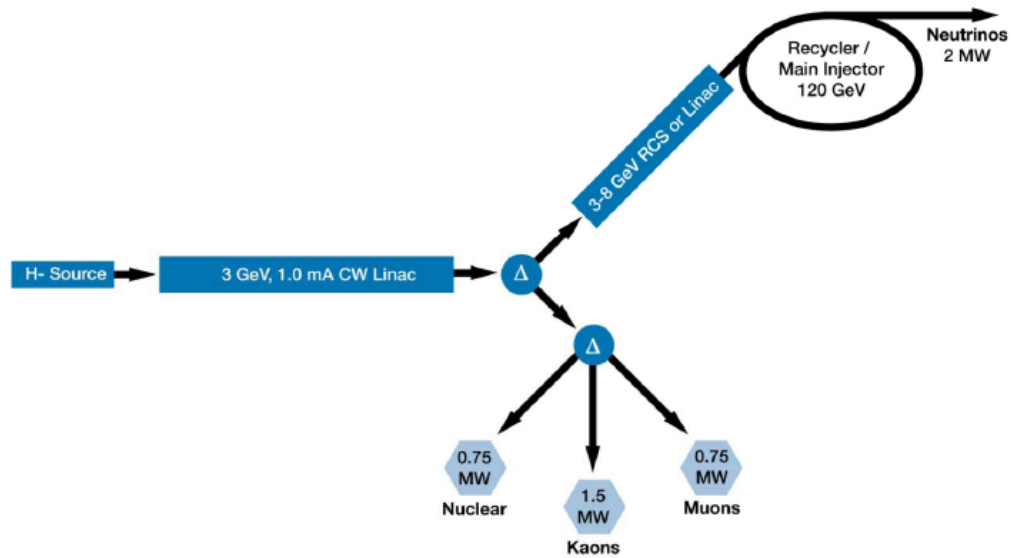

- 3 GeV, 1 mA, CW linac
- Greatly enhanced capabilities in the rare processes program
  - MW class beam power to multiple experiments with variable bunch configurations, simultaneous with neutrino operations
- Self-consistent concept with RCS for 3-8 GeV acceleration
  - Pulsed linac preferred, assuming it can be made to work and is cost effective

Slide courtesy of Steve Holmes

Project X

Reference Design
Provisional Siting

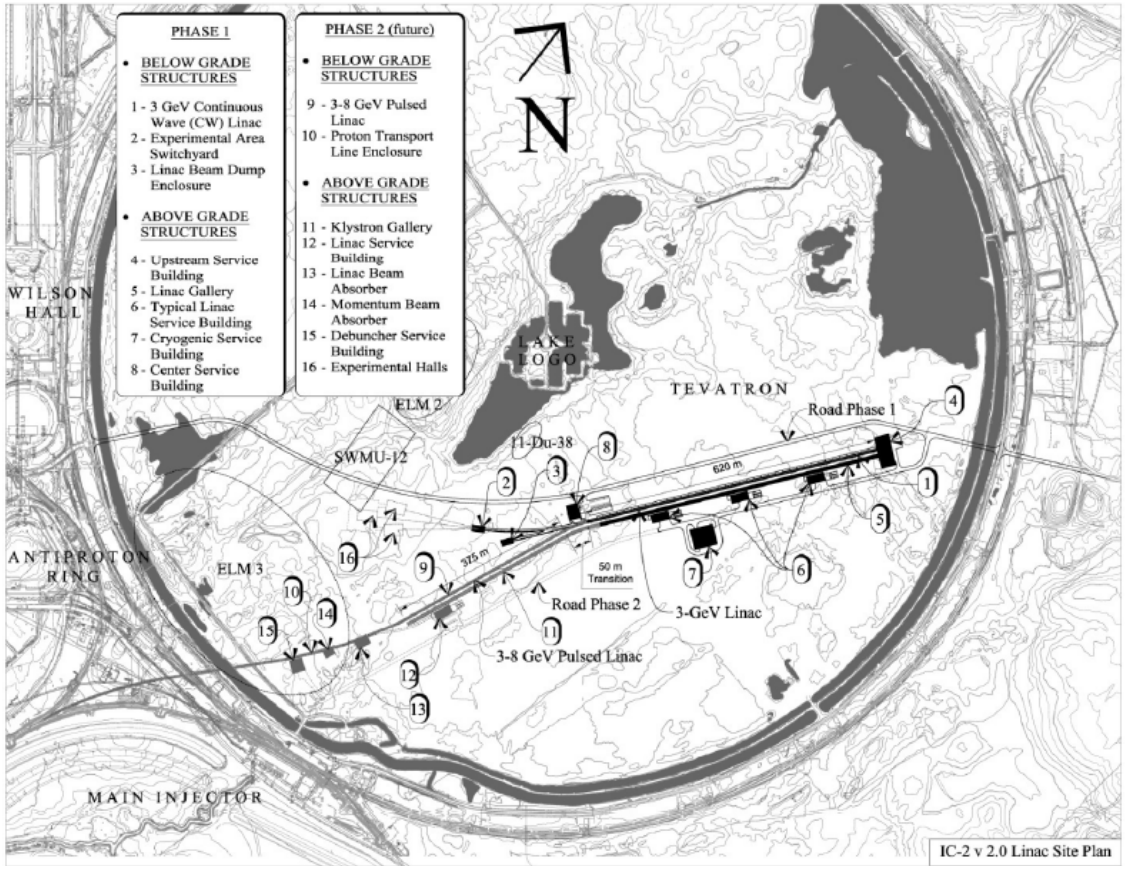

Slide courtesy of Steve Holmes

Project X

Mission

- A neutrino beam for long baseline neutrino oscillation experiments
  - 2 MW proton source at 60-120 GeV
- High intensity, low energy protons for kaon and muon based precision experiments
  - Operations simultaneous with the neutrino program
- A path toward a muon source for a possible future Neutrino Factory and/or a Muon Collider
  - Requires ~4 MW at ~5-15 GeV .

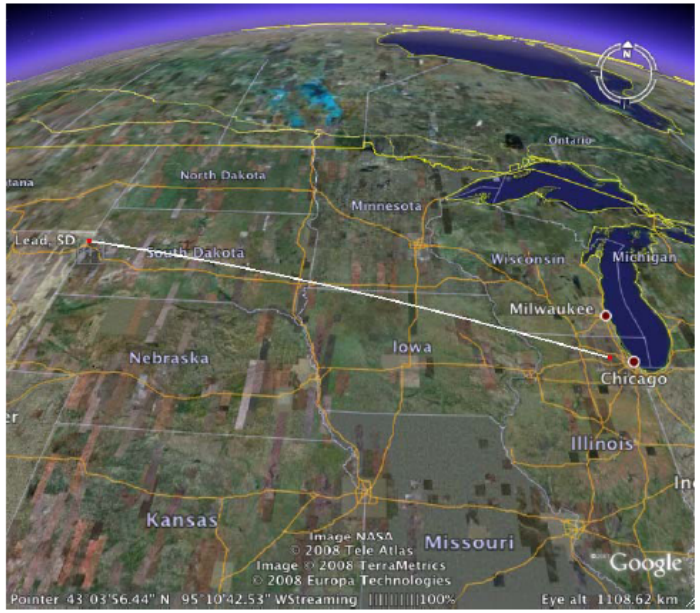

- Possible non-HEP missions under consideration
  - Nuclear physics and ADS development

Slide courtesy of Steve Holmes

From the high-level Project X
Functional Requirement Specification

Project X

Functional Requirements

Requirement	Description	Value
L1	Delivered Beam Energy, maximum	3 GeV
L2	Delivered Beam Power at 3 GeV	3 MW
L3	Average Beam Current (averaged over >1 µsec)	1 mA
L4	Maximum Beam Current (sustained for <1 µsec)	10 mA
L5	The 3 GeV linac must be capable of delivering correctly formatted beam to a pulsed linac, for acceleration to 8 GeV	
L6	Charge delivered to pulsed linac	26 mA-msec in < 0.75 sec
L7	Maximum Bunch Intensity	1.9×10^{8}
L8	Minimum Bunch Spacing	3.1 nsec (1/325 MHz)
L9	Bunch Length	<50 psec (full-width half max)
L10	Bunch Pattern	Programmable
L11	RF Duty Factor	100% (CW)
L12	RF Frequency	325 MHz and harmonics thereof
L13	3 GeV Beam Split	Three-way
P1	Maximum beam Energy	8 GeV
P2	The 3-8 GeV pulsed linac must be capable of delivering correctly formatted beam for injection into the recycler (or Main Injector).	
P3	Charge to fill Main Injector/cycle	26 mA-msec in <0.75 sec
P4	Maximum beam power delivered to 8 GeV	300 kW

Slide courtesy of Steve Holmes

Functional Requirements

Requirement	Description	Value
M1	Delivered Beam Energy, maximum	120 GeV
M2	Delivered Beam Energy, minimum	60 GeV
M3	Beam Power (60-120 GeV)	> 2 MW
M4	Beam Particles	Protons
M5	Beam Intensity	1.6×10^{14} protons per pulse
M6	Beam Pulse Length	9.5 μsec
M7	Bunches per Pulse	504
M8	Bunch Spacing	18.8 nsec (1/53.1 MHz)
M9	Bunch Length	<2 nsec (fullwidth half max)
M10	Pulse Repetition Rate (120 GeV)	1.333 sec
M11	Pulse Repetition Rate (60 GeV)	0.75 sec
I1	The 3 GeV and neutrino programs must operate simultaneously	
I2	Residual Activation from Uncontrolled Beam Loss	<20 mrem/hour (average) <100 mrem/hour (peak) @ 1 ft
I3	Scheduled Maintenance Weeks/Year	4
I4	Operational Reliability	90%
I5	Facility Lifetime	40 years
U1	Provisions should be made to support an upgrade of the CW linac to support an average current of 4 mA.	
U2	Provisions should be made to support an upgrade of the Main Injector to support a delivered beam power of ~4 MW at 120 GeV.	
U3	Provisions should be made to deliver CW proton beams as low as 1 GeV	
U4	Provision should be made to support an upgrade to the CW linac such that it can accelerate Protons	

Slide courtesy of Steve Holmes

Concepts of SC CW 3GeV, 1mA Linac

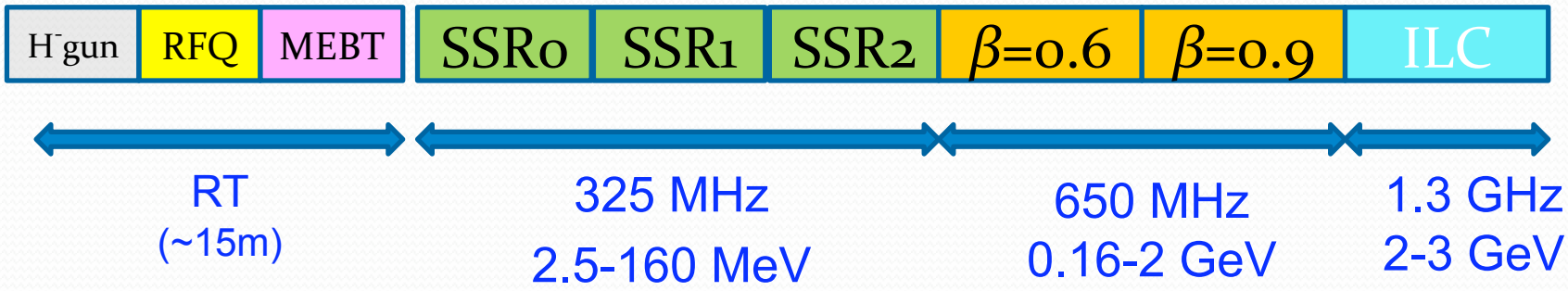

Section	Freq, MHz	Energy(MeV)	Cav/mag/CM	Type
SSR0 (β_G=0.11)	325	2.5-10	26 /26/1	SSR, solenoid
SSR1 (β_G=0.22)	325	10-32	18 /18/ 2	SSR, solenoid
SSR2 (β_G=0.42)	325	32-160	44 /24/ 4	SSR, solenoid
LB 650 (β_G=0.61)	650	160-520	42 /21/ 7	5-cell elliptical, doublet
HB 650 (β_G=0.9)	650	520-2000	96 / 12/ 12	5-cell elliptical, doublet
ILC 1.3 (β_G=1.0)	1300	2000-3000	64 / 8/ 8	9-cell elliptical, quad

All SRF cavities to operate at 2K

290 cavities plus ~250 for pulsed Linac

Slide courtesy of Nikolay Solyak

325 MHz spoke cavities family

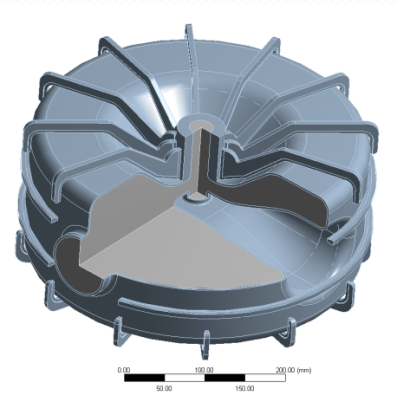

SSR0 -design

SSR1 – prototyping, testing

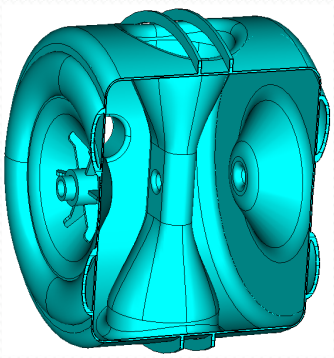

SSR2 -design

Parameters of the single-spoke cavities

cavity type	β_G	Freq MHz	$U_{acc,\,max}$ MeV	E_{max} MV/m	B_{max} mT	R/Q, Ω	G, Ω	*$Q_{0,2K}$ ×10⁹	$P_{max,2K}$ W
SSR0	β=0.114	325	0.6	32	39	108	50	6.5	0.5
SSR1	β=0.215	325	1.47	28	43	242	84	11.0	0.8
SSR2	β=0.42	325	3.34	32	60	292	109	13.0	2.9

* We assume surface resistance ~6 nOhm at 2 K and 30% of medium-field Q-slope for ~60 mT of the magnetic surface field.

Slide courtesy of Nikolay Solyak

RF parameters of the 650 MHz and ILC cavities

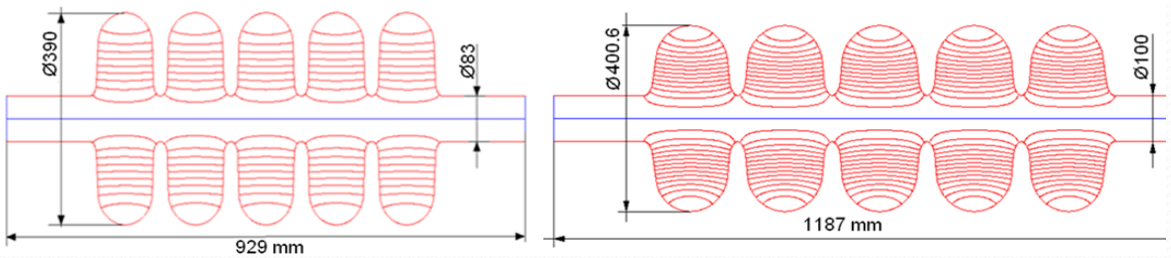

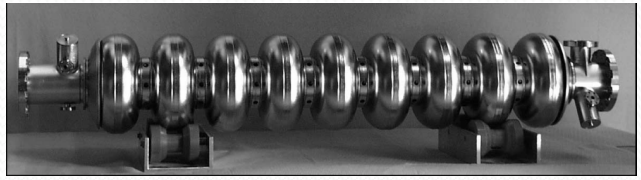

ILC

High energy SC Linac (160 – 3000 MeV)

Parameter	LE650	HE650	ILC
Beta_G	0.61	0.9	1
R/Q, Ohm	378	638	1036
G-factor, Ohm	191	255	270
Max. gain per cavity, MeV(on crest)	11.7	19.3	17.2
Gradient, MeV/m	16.6	18.7	16.9
Max. Surface electric field, MV/m	37.5	37.3	34
E_{pk}/E_{acc}	2.26	2	2
Max surf magnetic field, mT	70	70	72
B_{pk}/E_{acc}	4.21	3.75	4.26
$Q_{0,2K,} \times 10^{10}$	1.5	2.0	1.5
P_{2K} [W] max	24	29	20

Slide courtesy of Nikolay Solyak

Design Status for Cavities & Cryomodules

- EM designs for all cavities
  - HOM couplers an open issue (needed?)
- Engineering design for SSR-1 cavities
  - 2 prototypes have been tested in vertical dewar
  - 1 of 2 has been dressed and tested in horizontal test cryostat
  - 2 additional cavities in fabrication at IUAC (Delhi)
  - 10 additional cavities in fabrication by industry
    - First pair due end of calendar year
- Six beta 0.9 single-cell 650 MHz cavities in procurement
- Beta 0.6 single-cell cavities to be prototyped at JLab
- 88 ILC cavities total (44 received / 44 on order)
  - ILC R&D program, but funded through SRF and ARRA
- Cryomodule design work in early stages

Project X

Working Timeline

- FY2010
  - Complete Reference Design Report and preliminary cost estimate
  - Revise RD&D plan and initiate work
- FY2011
  - CD-0
  - Initiate work on Conceptual Design Report
  - Initiate permitting documentation
- FY2012
  - CD-1
- FY2013
  - CD-2/3a
- FY2014
  - CD-3: Initiate Construction
- ~FY2015~2019
  - Construct

Slide courtesy of Steve Holmes

Project X

Collaboration Status

- Collaboration MOU for R&D phase:

ANL	ORNL/SNS
BNL	MSU
Cornell	TJNAF
Fermilab	SLAC
LBNL	ILC/ART

- MOU/Addendum on development of high intensity proton sources in place between Fermilab and Indian institutes:

BARC/Mumbai

IUAC/Delhi

RRCAT/Indore

VECC/Kolkota

Slide courtesy of Steve Holmes

Sep 8-9, 2010, at Fermilab

Next collaboration meeting planned for April 11-13, 2011, at ORNL/SNS

Project X

Collaboration Meeting:
Working Groups

• RF Systems	R. Pasquinelli/B. Chase
• Cavities & CMs	M. Champion/B. Rimmer
• Main Injector/Recycler	I. Kourbanis/R. Ryne
• Instrumentation/Controls	M. Wendt/C. Briegel/W. Blokland
• Cryogenics	A. Klebaner/B. Petersen
• Linac Integration	S. Yakovlev/J. Kerby/J. Galambos
• Pulsed Linac/Injection	S. Nagaitsev/D. Johnson/D. Raparia
• Linac Front End	R. Webber/D. Li

Agenda: http://indico.fnal.gov/conferenceDisplay.py?confId=3542

Slide courtesy of Steve Holmes

Role of Project X in ADS

- A demonstration facility that couples a subcritical assembly to a high-power accelerator requires 1-2 MW beam power in the GeV range (c.f. Henderson talk)
- The 3 GeV CW Linac has many of the elements of a prototypical ADS Linac
  - 1 mA average current upgradeable to 4 mA
  - Beam power ranging from 3 to 12 MW
  - Energy in the 1-2 GeV range is considered optimal, so provision will be retained for delivering a beam energy less than 3 GeV
- Primary technical issue is machine reliability
  - ADS Linacs have very stringent trip rate requirements (c.f. Henderson talk)
- The Project X CW Linac is well suited to power a demonstration facility with focus on:
  - High reliability component development, fault tolerant linac and rapid fault recovery development
  - Target system and subcritical assembly technology development and demonstration
  - Demonstration of transmutation technologies and support for fuel studies
  - Materials irradiation
- Indian colleagues plan to utilize Project X technology in their ADS program